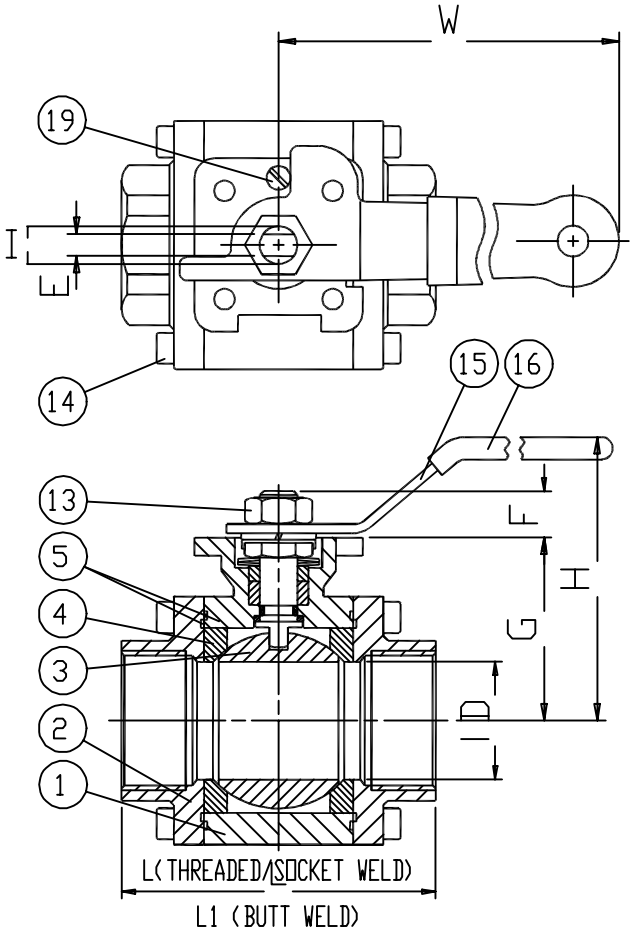

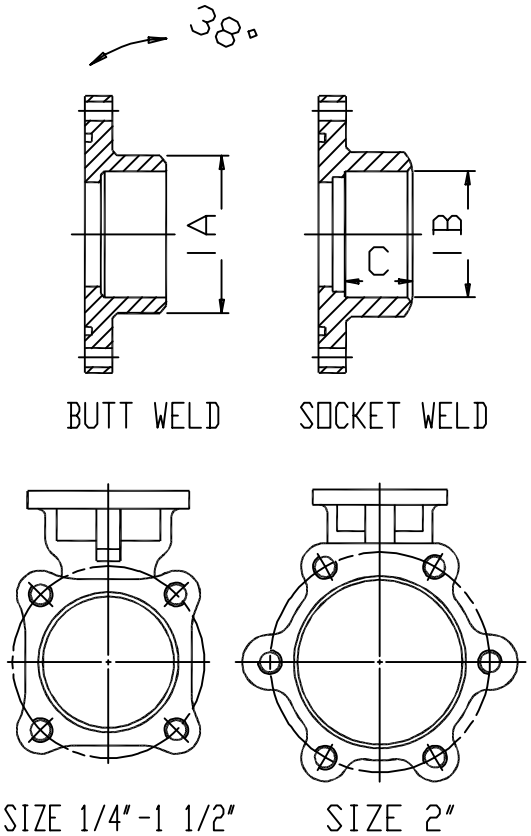

AF-35 SIZE: 1/4"-2" FIRE-SAFE API 607

3-PIECE FULL PORT and STANDARD PORT BALL VALVE
SCREWED ENDS, BUTT WELDED END, SOCKET WELDED END
ISO 5211 MOUNTING PAD
DIN 3202-M3 (SCREWED ENDS/SOCKET WELDED ENDS)
-S13 (BUTT WELDED ENDS)
PRESSURE: 2000 PSI(CLASS 800)W.O.G.
STAINLESS STEEL: 316 BODY, with 316 SS TRIM
CARBON STEEL: WCB BODY, with 316 SS TRIM

STANDARDS APPLICABLE

ASME B16.34-STEEL VALVES FLANGED,THREADED,AND WELDING END
ASME B1.20.1-PIPE THREADS,GENERAL PURPOSE
ASME B16.10-FACE TO FACE&END TO END DIMENSIONS OF VALVES
API 598-VALVE INSPECTION AND TESTING
MSS SP72-BALL VALVES WITH FLANGED OR BUTT WELDING ENDS FOR GENERAL SERVICES
MSS SP25-STANDARD MARKING SYSTEM FOR VALVES FITTINGS, FLANGES AND UNIONS

P-T RATINGS

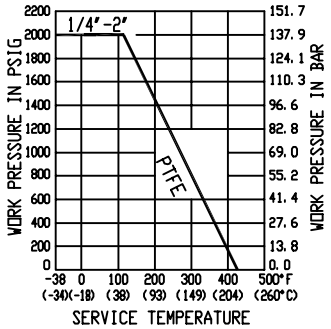

ITEM	DESCRIPTION	STAINLESS STEEL	CARBON STEEL	Q'TY
1	BODY	ASTM A351 CF8M	ASTM A216 WCB	1
2	END CAP	ASTM A351 CF8M	ASTM A216 WCB	2
3	BALL	ASTM A351 CF8M/316	ASTM A351 CF8M/316/304	1
4	SEAT	PTFE		2
5-1	GASKET	GRAPHITE		2
5-2		PTFE		2
6-1	THRUST WASHER	GRAPHITE		1
6-2		PTFE		1
7	STEM PACKING	GRAPHITE		1
8	GLAND	AISI 304		1
9	BELLEVILLE WASHER	AISI 301		2
10	STEM	ASTM A276 316		1
11	PACKING NUT	AISI 304		1
12	SPRING WASHER	AISI 304		1
13	HANDLE NUT	AISI 304		1
14	BOLT	ASTM A193 B8	ASTM A193 B7	8-12
15	HANDLE	AISI 304	ZINC PLATED STEEL	1
16	HANDLE GRIP	VINIL PLASTISOL		1
17	LOCK SADDLE	AISI 304		1
18	O-RING	VITON		1
19	STOPPOER NUT	AISI 304	CARBON STEEL	1
20	ANTI-STATIC DEVICE	AISI 304		1-2

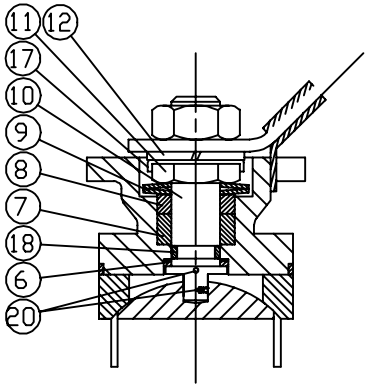

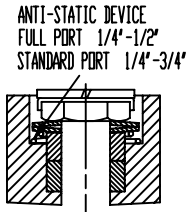

SIZE IN	SIZE DN	ØD IN	ØD MM	L IN	L MM	L1 IN	L1 MM	E IN	E MM	F IN	F MM	G IN	G MM	H IN	H MM	W IN	W MM	ØA IN	ØA MM	ØB IN	ØB MM	C IN	C MM	ISO 5211 (F)	I IN	I MM	Weights KG
1/4"	8	0.43	11.0	2.55	65.0	2.75	70.0	0.29	7.4	0.31	8.0	1.47	37.5	2.75	70.0	5.51	140.0	0.54	13.8	0.56	14.2	0.39	10.0	F04	0.47	12	1.1
3/8"	10																	0.68	17.3	0.69	17.6						1.1
1/2"	15	0.55	14.0	2.95	75.0	2.95	75.0											0.85	21.7	0.86	21.8	0.51	13.0				1.1
3/4"	20	0.80	20.5	3.14	80.0	3.54	90.0	0.34	8.7	0.43	11.0	1.96	52.0	3.54	90.0	7.08	180.0	1.07	27.2	1.07	27.2	0.59	15.0	F04-F05	0.55	14	1.6
1"	25	0.98	25.0	3.54	90.0	3.93	100.0					2.36	60.0	3.93	100.0			1.34	34.0	1.33	33.9						2.2
1 1/4"	32	1.24	31.5	4.33	110.0	4.33	110.0	0.55	14.1	0.67	17.0	2.83	72.0	4.40	112.0	8.46	215.0	1.68	42.7	1.68	42.7	0.63	16.0	F07	0.79	20	3.3
1 1/2"	40	1.45	37.0	4.72	120.0	4.92	125.0					2.99	76.0	4.52	115.0			1.91	48.6	1.92	48.8						4.6
2"	50	1.96	50.0	5.51	140.0	5.90	150.0					3.66	93.0	5.23	133.0			2.38	60.5	2.41	61.2	0.67	17.0				7.3

REV	DATE	DESCRIPTION	CODE	REVISER	REMARKS
					1/4"~2"
					2000 PSI
					FIRE-SAFE
					API 607
		Double-D Stem			

MATERIAL	APPROVE		CHECK		F
	SCALE	FREE	UNIT	mm	DRAWN BY: Peggy
	PART NO	AF-35			DATE: 2006.10.02
OTHER	DWG NO	AF-35-KA		TITLE	Q'TY
					3-PC THREAD END BALL VALVE
					Anson Flow Corp.